Generating families of developable surfaces in $\mathbb{R}^3$

By SHYUICHI IZUMIYA
Department of Mathematics, Hokkaido University,
Sapporo 060-0810, Japan
e-mail : izumiya@math.sci.hokudai.ac.jp

October 4, 2000

Dedicated to Professor Shuzo Izumi on his sixtieth birthday

Abstract

The developable surface in $\mathbb{R}^3$ has the unique (singular or non-singular) Legendrian lift to the projective cotangent bundle on $\mathbb{R}^3$. In this paper we show that the converse assertion holds for singular ruled surfaces. We call such a surface *a ruled front*. We give an explicit form of the generating family of the Legendrian lift of a developable surface (a ruled front) and study singularities and their stability.

1 Introduction

Developable surfaces in $\mathbb{R}^3$ are the classical subject in differential geometry. It is, however, paid attention in several areas again. (i.e., Projective differential geometry[17], Computer graphics[7, 19] containing the industrial design etc.) The developable surface is a surface with the vanishing Gaussian curvature on the regular part and it is also a ruled surface. If the surface is the form $z = f(x, y)$ (i.e., the graph of the function $f(x, y)$), then the surface is a developable surface if and only if the Monge-Ampére equation $rt - s^2 = 0$ is satisfied on the surface, where $r = z_{xx}$, $s = z_{xy}$, $t = z_{yy}$. It has been classically known that the regular developable surface is a part of a cone, a cylinder or the tangent developable of a curve. The cylinder and the plane are complete non-singular developable surfaces, other developable surfaces always have singularities if these are complete. Recently there appeared several articles concerning on singularities of developable surfaces in $\mathbb{R}^3$ (cf., [5, 8, 9, 10, 11, 12, 15, 16, 18]). In these article classifications of singularities of developable surfaces are given. The set of developable surfaces forms a special class of ruled surfaces (ruled surfaces are also special surfaces in general singular surfaces), then the meaning of the genericity is quite delicate. For the tangent developable of a space curve, Cleave[5] is the first person who gave a generic classification of singularities. He has shown that the tangent developable of generic space curve is locally diffeomorphic to the cuspidal edge or

1991 Mathematics Subject classidication. 53A25, 53A05, 58C27
Keywords and Phrase. developable surfaces, generic property, singularities

the cuspidal crosscap at a singular point (cf., Example 2.5). Moreover, the cuspidal crosscap point corresponds to the point where the torsion of the curve vanishes. So the swallowtail does not appear for the tangent developable of a generic space curve. The more degenerated singularities of the tangent developable of a curve are classified by Mond[15], Sherbak[18] and Ishikawa[9]. It has been known that the tangent developable of a regular curve is the envelope of the osculating plane along the original curve. There are other two natural developable surfaces along a regular curve with respect to the Frenet frame. One is the envelope of the normal planes which is called *a focal developable* of the curve. Another one is the envelope of the rectifying planes which is called *a rectifying developable* of the curve. The situation is, however, rather different among these developable surfaces. The singularities of the focal developable (respectively, the rectifying developable) of a generic space curve has been classified by Porteous[16] (respectively, Izumiya, Katsumi and Yamasaki[11]). These developable surfaces are locally diffeomorphic to the cuspidal edge or the swallowtail at a singular point. Here, $C \times \mathbb{R} = \{(x_1, x_2) \mid {x_1}^2 = {x_2}^3 \} \times \mathbb{R}$ is *the cuspidal edge*, $CCR = \{(x_1, x_2, x_3) \mid x_2^2 = x_1^2 x_3^3 \}$ is *the cuspidal crosscap* and $SW = \{(x_1, x_2, x_3) \mid x_1 = 3u^4 + u^2 v, x_2 = 4u^3 + 2uv, x_3 = v \}$ is *the swallowtail.*

In this paper we consider a generic classification and the stability of the singularities of general developable surfaces. Briefly speaking, the cuspidal edge, the cuspidal crosscap or the swallowtail appear as singularities of generic developable surfaces (cf., Theorems 2.8 and 2.9, Fig.1).

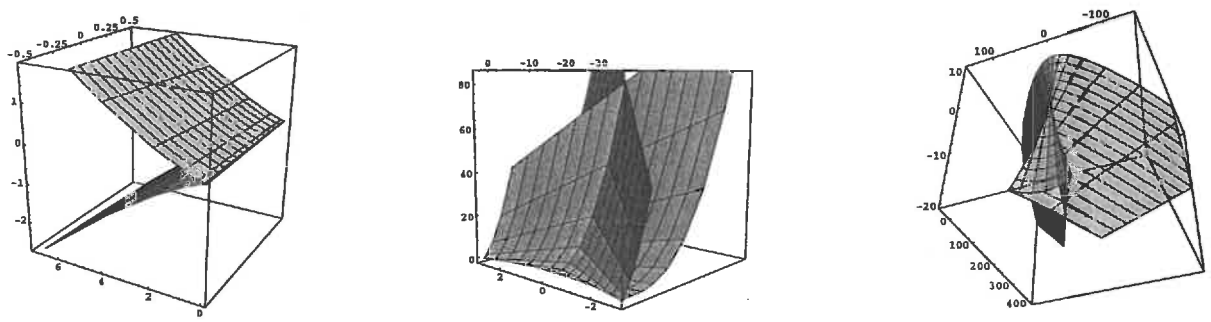

Fig. 1

In Example 2.7 we define the Gaussian rectifying surface of a space curve with non-vanishing curvature. As a corollary of our theorem, we can show that the all above singularities appear on the rectifying Gaussian surface of a generic space curve.

On the other hand, these singular surfaces are realised as wave fronts of Legendrian inclusions (cf., [3]). So these surfaces have the structure of both of wave fronts (i.e., co-orientable surfaces) and ruled surfaces. We call such the surface *a ruled front.* Proposition 3.2 asserts that the singular ruled front is a developable surface. It follows from the general theory of Legendrian singularities (cf., [2, 3, 20]) that these surfaces (with extra components) have generating families at least locally . In this paper we explicitly give the generating family of a developable surface under a certain good condition. We apply ordinary techniques of singularity thoery to these families of functions, so that we interpret the meaning of stability and give a part of classifications.

All curves and maps considered here are of class C^∞ unless stated otherwise.

Acknowledgements This article has been completed during the author's stay at Isaac Newton Insitute for Mathematical Sciences, Cambridge University 2000. The author would like to thank all staffs of the institute for their hospitality and encouragement.

2 Basic notions and examples

We now present basic concepts and properties of ruled surfaces and developable surfaces in $\mathbb{R}^3$. The classical theory has been given in [6]. These are, however, not so popular now, so that we review the classical framework in the first place. Since developable surfaces are ruled surface, we start to give the definition of ruled surfaces. *A ruled surface* in $\mathbb{R}^3$ is (locally) the image of the map $F_{(\gamma,\delta)} : I \times J \to \mathbb{R}^3$ defined by $F_{(\gamma,\delta)}(t,u) = \gamma(t) + u\delta(t)$, where $\gamma : I \to \mathbb{R}^3$, $\delta : I \to \mathbb{R}^3 \setminus \{0\}$ are smooth mappings and I, J are open intervals. We assume that I is bounded. We usually call the map $F_{(\gamma,\delta)}$ the ruled surface in stead of the image. We call γ *a base curve* and δ *a director curve.* The straightlines $u \mapsto \gamma(t) + u\delta(t)$ are called *rulings.*

For the ruled surface $F_{(\gamma,\delta)}$, if δ has a constant direction, then it is a cylindrical surface. Therefore, the ruled surface $F_{(\gamma,\delta)}$ is said to be *noncylindrical* provided $\delta' \wedge \delta$ never vanishes, where $\wedge$ denotes *the exterior product* of vectors in $\mathbb{R}^3$. Thus the rulings are always changing directions on a noncylindrical ruled surface. It is clear that the set $\mathcal{O}_1$ consisting of noncylindrical ruled surfaces is an open and dense subset in $C^\infty_{pr}(I, \mathbb{R}^3 \times S^2)$. Then we have the following lemma (cf., [6]).

Lemma 2.1 (1) *Let $F_{(\gamma,\delta)}(t,u)$ be a noncylindrical ruled surface with $\|\delta(t)\| \equiv 1$. Then there exists a smooth curve $\sigma : I \longrightarrow \mathbb{R}^3$ such that Image $F_{(\gamma,\delta)}$ = Image $F_{(\sigma,\delta)}$ and $\langle \sigma'(t), \delta'(t)\rangle = 0$, where $\langle , \rangle$ denotes the canonical inner product on $\mathbb{R}^3$. The curve $\sigma(t)$ is called the striction curve of $F_{(\gamma,\delta)(t,u)}$.*

(2) *The striction curve of a noncylindrical ruled surface $F_{(\gamma,\delta)(t,u)}$ does not depend on the choice of the base curve γ.*

We can specify the place where the singularities of the ruled surface are located.

Lemma 2.2 *Let $F_{(\sigma,\delta)}$ be a ruled surface with the striction curve σ and $\|\delta(t)\| \equiv 1$. If $x_0 = F_{(\sigma,\delta)}(t_0, u_0)$ is a singular point of the ruled surface $F_{(\sigma,\delta)}$ then $u_0 = 0$ (i.e., $x_0 \in$ Image σ). Moreover, if $\sigma'(t_0) \neq \mathbf{0}$, then the ruling through $\sigma(t_0)$ is tangent to σ at t_0.*

Proof. We can calculate the partial derivative of $F_{(\sigma,\delta)}$ as follows:

$$\frac{\partial F_{(\sigma,\delta)}}{\partial t}(t,u) = \sigma'(t) + u\delta'(t), \frac{\partial F_{(\sigma,\delta)}}{\partial u}(t,u) = \delta(t).$$

Therefore we have

$$\frac{\partial F_{(\sigma,\delta)}}{\partial t} \wedge \frac{\partial F_{(\sigma,\delta)}}{\partial u}(t,u) = \sigma'(t) \wedge \delta(t) + u\delta'(t) \wedge \delta(t),$$

where $\wedge$ denotes the exterior product in $\mathbb{R}^3$. Since $\|\delta(t)\| = \sqrt{\langle \delta(t), \delta(t)\rangle} \equiv 1$, we have $\langle \delta'(t), \delta(t)\rangle \equiv 0$. By the condition that $\langle \sigma'(t), \delta'(t)\rangle \equiv 0$ and the above, there exists a smooth function $\lambda(t)$ such that $\sigma'(t) \wedge \delta(t) = \lambda(t)\delta'(t)$. So we have

$$\begin{aligned} \|\frac{\partial F_{(\sigma,\delta)}}{\partial t} \wedge \frac{\partial F_{(\sigma,\delta)}}{\partial u}(t,u)\|^2 &= \|\lambda(t)\delta'(t) + u\delta'(t) \wedge \delta(t)\|^2 \\ &= \lambda(t)^2\|\delta'(t)\|^2 + 2\lambda(t)u\langle \delta'(t), \delta'(t) \wedge \delta(t)\rangle + u^2\|\delta'(t) \wedge \delta(t)\|^2 \\ &= (\lambda(t)^2 + u^2)\|\delta'(t)\|^2. \end{aligned}$$

Suppose that $x_0 = F_{(\sigma,\delta)}(t_0, u_0)$ is a singular point of the ruled surface $F_{(\sigma,\delta)}$, then

$$\|\frac{\partial F_{(\sigma,\delta)}}{\partial t} \wedge \frac{\partial F_{(\sigma,\delta)}}{\partial u}(t_0, u_0)\| = 0.$$

Since $F_{(\sigma,\delta)}$ is noncylindrical, this means that $u_0 = \lambda(t_0) = 0$. □

By Lemma 2.2, the singularities of a ruled surface are located on the striction curve. If we consider the crosscap $F_{(\gamma,\delta)}(t,u) = \left(t^2, \frac{u}{\sqrt{1+t^2}}, \frac{ut}{\sqrt{1+t^2}}\right)$, then $\gamma(t) = (t^2, 0, 0)$, $\gamma'(t) = (2t, 0, 0)$ and $\delta'(t) = \left(0, \frac{-t}{\sqrt{(1+t^2)^3}}, \frac{1}{\sqrt{(1+t^2)^3}}\right)$. By definition, $\gamma(t)$ is the striction curve of $F_{(\gamma,\delta)}(t,u)$ and the singular point is $(0,0,0)$.

Let $F_{(\gamma,\delta)}$ be a ruled surface. We say that $F_{(\gamma,\delta)}$ is *a developable surface* if the Gaussian curvature on the regular part of $F_{(\gamma,\delta)}$ vanishes. Let $(t,u) \in I \times J$ be a regular point of $F_{(\gamma,\delta)}$ and $II = Ldt^2 + 2Mdtdu + Ndu^2$ be the second fundamental form. Then the unit normal vector is

$$\boldsymbol{n}(t,u) = \frac{\boldsymbol{\gamma}'(t) \wedge \boldsymbol{\delta}(t) + u\boldsymbol{\delta}'(t) \wedge \boldsymbol{\delta}(t)}{\|\boldsymbol{\gamma}'(t) \wedge \boldsymbol{\delta}(t) + u\boldsymbol{\delta}'(t) \wedge \boldsymbol{\delta}(t)\|}.$$

Since $\boldsymbol{\gamma}'(t) \wedge \boldsymbol{\delta}(t) + u\boldsymbol{\delta}'(t) \wedge \boldsymbol{\delta}(t) = \boldsymbol{\gamma}''(t) + u\boldsymbol{\delta}''(t)$, $\frac{\partial^2 F}{\partial t \partial u}(t,u) = \boldsymbol{\delta}'(t)$ and

$$\boldsymbol{\gamma}'(t) \wedge \boldsymbol{\delta}(t) + u\boldsymbol{\delta}'(t) \wedge \boldsymbol{\delta}(t) = \mathbf{0},$$

we have

$$\begin{aligned} M &= \left\langle \frac{\partial^2 F}{\partial t \partial u}(t,u), \boldsymbol{n}(t,u) \right\rangle = \frac{\det(\boldsymbol{\gamma}(t)\ \boldsymbol{\delta}(t)\ \boldsymbol{\delta}'(t))}{\|\boldsymbol{\gamma}'(t) \wedge \boldsymbol{\delta}(t) + u\boldsymbol{\delta}'(t) \wedge \boldsymbol{\delta}(t)\|}, \\ N &= \left\langle \frac{\partial^2 F}{\partial u^2}(t,u), \boldsymbol{n}(t,u) \right\rangle = 0. \end{aligned}$$

Therefore, $K(t,u) = -M^2 = 0$ if and only if $\det(\boldsymbol{\gamma}'(t)\ \boldsymbol{\delta}(t)\ \boldsymbol{\delta}'(t)) = 0$. So we adopt the following definition of singular developable surfaces: We say that $F_{(\gamma,\delta)}$ is *a developable surface* if $\det(\boldsymbol{\gamma}'(t)\ \boldsymbol{\delta}(t)\ \boldsymbol{\delta}'(t)) = 0$ for any $t \in I$. Then we have the following simple lemma.

Lemma 2.3 *Let $F_{(\gamma,\delta)}$ be a noncylindrical ruled surface. Then $F_{(\gamma,\delta)}$ is a developable surface if and only if there exist smooth functions $\mu, \lambda : I \longrightarrow \mathbb{R}$ such that $\boldsymbol{\gamma}'(t) = \mu(t)\boldsymbol{\delta}(t) + \lambda(t)\boldsymbol{\delta}'(t)$.*

By the lemma, we can control noncylindrical developable surfaces by using $\mu(t), \lambda(t)$ and $\boldsymbol{\delta}(t)$. We adopt the space of noncylindrical developable surfaces as follows:

$$Dev(I, \mathbb{R}^3) = \{(\mu, \lambda, \boldsymbol{\delta}) \mid (\mu, \lambda, \boldsymbol{\delta}) : I \longrightarrow \mathbb{R}^2 \times (\mathbb{R}^3 \setminus \{\mathbf{0}\}) \text{ proper } C^\infty \text{ map with } \boldsymbol{\delta}(t) \wedge \boldsymbol{\delta}'(t) \neq \mathbf{0}\}.$$

The purpose of this paper is to study genericity and stability of noncylindrical developable surfaces in $Dev(I, \mathbb{R}^3)$ with Whitney C^∞ topology. We now detect the singular locus of a noncylindrical developable surface.

Corollary 2.4 *Let $F_{(\gamma,\delta)}$ be a noncylindrical developable surface. We fix smooth functions $\mu, \lambda : I \longrightarrow \mathbb{R}$ with $\boldsymbol{\gamma}'(t) = \mu(t)\boldsymbol{\delta}(t) + \lambda(t)\boldsymbol{\delta}'(t)$. Then the set of singular points of $F_{(\gamma,\delta)}$ is a curve parametrized by $\boldsymbol{\sigma}(t) = \boldsymbol{\gamma}(t) - \lambda(t)\boldsymbol{\delta}(t)$. If the curve $\boldsymbol{\sigma}(t)$ is non-singular, $F_{(\gamma,\delta)}$ is the tangent developable of $\boldsymbol{\sigma}(t)$.*

Proof. It is clear that $(t_0, u_0) \in I \times J$ is a singular point of $F_{(\gamma,\delta)}$ if and only if

$$\frac{\partial F_{(\gamma,\delta)}}{\partial t}(t_0, u_0) \wedge \frac{\partial F_{(\gamma,\delta)}}{\partial u}(t_0, u_0) = \boldsymbol{\gamma}'(t_0) \wedge \boldsymbol{\delta}(t_0) + u_0 \boldsymbol{\delta}'(t_0) \wedge \boldsymbol{\delta}(t_0) = \mathbf{0}.$$

If we substitute the relation $\boldsymbol{\gamma}'(t_0) = \mu(t_0)\boldsymbol{\delta}(t_0) + \lambda(t_0)\boldsymbol{\delta}'(t_0)$ into the last equality, we have

$$\lambda(t_0)\boldsymbol{\delta}(t_0) \wedge \boldsymbol{\delta}'(t_0) + u_0 \boldsymbol{\delta}(t_0) \wedge \boldsymbol{\delta}'(t_0) = \mathbf{0}.$$

Since $\boldsymbol{\delta}(t_0) \wedge \boldsymbol{\delta}'(t_0) \neq \mathbf{0}$, we have $u_0 + \lambda(t_0) = 0$. So the singular locus on $F_{(\gamma,\delta)}$ is given by

$$\Sigma(F_{(\gamma,\delta)}) = \{\boldsymbol{\gamma}(t) - \lambda(t)\boldsymbol{\delta}(t) \mid t \in I\}.$$

By a direct calculation, we can easily show that the singular locus $\boldsymbol{\gamma}(t) - \lambda(t)\boldsymbol{\delta}(t)$ is the striction curve of $F_{(\gamma,\delta)}$. Moreover, we have

$$\boldsymbol{\gamma}'(t) - \lambda'(t)\boldsymbol{\delta}(t) - \lambda(t)\boldsymbol{\delta}'(t) = \mu(t)\boldsymbol{\delta}(t) + \lambda(t)\boldsymbol{\delta}'(t) - \lambda'(t)\boldsymbol{\delta}(t) - \lambda(t)\boldsymbol{\delta}'(t) = (\mu(t) - \lambda'(t))\,\boldsymbol{\delta}(t),$$

so that the developable surface $F_{(\gamma,\delta)}$ is considered to be the tangent developable of the singular locus if $\mu(t) - \lambda'(t) \neq 0$. □

If $(t, u) \in I \times J$ is a regular point, the normal direction of $F_{(\gamma,\delta)}$ at (t, u) is given by $\tilde{n}(t, u) = \boldsymbol{\gamma}'(t) \wedge \boldsymbol{\delta}(t) + u\boldsymbol{\delta}(t) \wedge \boldsymbol{\delta}(t)$. Since $\boldsymbol{\gamma}'(t) = \mu(t)\boldsymbol{\delta}(t) + \lambda(t)\boldsymbol{\delta}'(t)$, the direction of the normal $\tilde{n}(t, u) = -(\lambda(t) + u)\,\boldsymbol{\delta}(t) \wedge \boldsymbol{\delta}'(t)$ does not depend on u. Even if the point (t, u) is a singular point of $F_{(\gamma,\delta)}$, $\boldsymbol{\delta}(t) \wedge \boldsymbol{\delta}'(t)$ determines the normal direction. We say that a surface is *co-orientable* if the normal direction of the surface is determined at any point of the surface. A regular surface is, of course, co-orientable. The above assertion means that a developable surface is co-orientable.

We now give important examples of developable surfaces.

Example 2.5 (Tangent developables of space curves). Let $\boldsymbol{\gamma} : I \longrightarrow \mathbb{R}^3$ be a regular curve (i.e., $\boldsymbol{\gamma}'(t) \neq \mathbf{0}$). If we adopt $\boldsymbol{\delta}(t) = \boldsymbol{\gamma}'(t)$, then we call the developable surface $F_{(\gamma,\delta)}$ *the tangent developable of* $\boldsymbol{\gamma}$. The developable surface $F_{(\gamma,\gamma')}$ is noncylindrical if and only if $\boldsymbol{\gamma}'(t) \wedge \boldsymbol{\gamma}''(t) \neq \mathbf{0}$. It is equivalent to the condition that the curvature $\kappa(t)$ of $\boldsymbol{\gamma}(t)$ does not vanish. It has been classically known that the tangent developable of a space curve has the cuspidal edge along the curve $\boldsymbol{\gamma}(t)$ if the torsion $\tau(t) \neq 0$ (cf., Fig.1). It is incredible that the generic classification of the singularities of tangent developables was found quite recently. Cleave[5] has shown that the tangent developable of a space curve has the cuspidal crosscap (cf., Fig.1) at the point $\boldsymbol{\gamma}(t_0)$ if $\tau(t_0) = 0$ and $\tau'(t_0) \neq 0$. These conditions are generic for space curves. It is known that the tangent developable is the envelope of the family of osculating planes along $\boldsymbol{\gamma}$.

On the other hand, even if there exists a point $t_0 \in I$ such that $\boldsymbol{\gamma}'(t_0) = \mathbf{0}$, we can smoothly extend the tangent vector field along the curve under a certain condition (cf., [9]). Here, we only consider an example given by $\boldsymbol{\gamma}(t) = (t^2, t^3, t^4)$. In this case $\boldsymbol{\gamma}'(t) \neq \mathbf{0}$ except at the origin. The direction of $\boldsymbol{\gamma}'(t)$ is equal to the direction of the vector $\boldsymbol{\delta}(t) = (2, 3t, 4t^2)$ which is also smooth at the origin. So the ruled surface $F_{(\gamma,\delta)}$ is called *a tangent developable surface* of the singular curve $\boldsymbol{\gamma}(t) = (t^2, t^3, t^4)$. Since $\boldsymbol{\gamma}'(t) = t\boldsymbol{\delta}(t) + 0\boldsymbol{\delta}'(t)$, the condition in Lemma 2.3 is satisfied. Arnol'd[1] gave the observation that this surface has swallowtail at the origin. More detailed description is given by [9]. It is, however, known that the curve $\boldsymbol{\gamma}(t) = (t^2, t^3, t^4)$ is deformed into a regular curve under a sufficiently small perturbation. Therefore, the swallowtail is not

a generic (stable) singularity of tangent developable surfaces of space curves. For the curve $\gamma(t) = (t^2, t^3, t^4)$, the tangent developable is given by $F_{(\gamma,\delta)}(t,u) = (t^2+2u, t^3+3tu, t^4+4tu)$. If we slightly perturb the curve into $\gamma_\varepsilon(t) = (t^2, t^3-\varepsilon t, t^4)$, the corresponding tangent developable is $F_{(\gamma_\varepsilon,\delta)}(t,u) = (t^2+2tu, t^3-\varepsilon t+u(3t^2-\varepsilon), t^4+4t^3u)$ which has the cuspidal crosscap at the origin. The situation is depicted in Fig.2. The left picture is $F_{(\gamma,\delta)}(t,u)$ and the right one is $F_{(\gamma_{0.5},\delta)}(t,u)$.

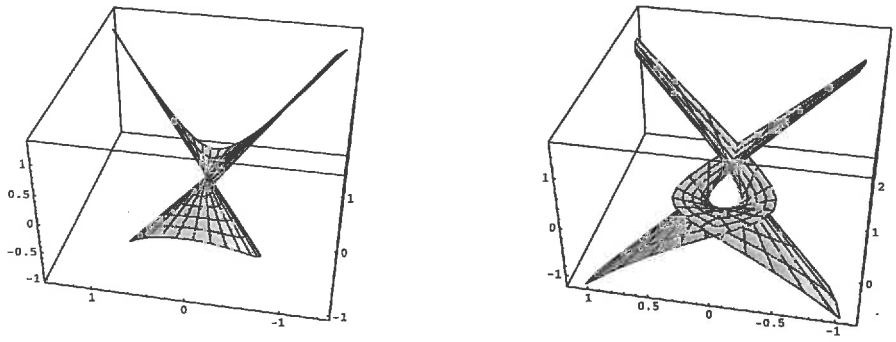

Fig. 2

Example 2.6 (Focal developables of space curves). Let $\gamma : I \longrightarrow \mathbb{R}^3$ be a regular curve such that the curvature and the torsion of the curve do not vanish at any point. The envelop of the family of normal planes along γ is called *the focal developable* (or *the polar developable*) of the curve γ. In order to represent the focal developable in our form, we now consider the arclength parameter s, so that the tangent vector $\gamma'(s)$ is a unit vector. The principal normal of γ is $\boldsymbol{n}(s) = \dfrac{\gamma''(s)}{\|\gamma(s)\|}$ and the binormal is $\boldsymbol{b}(s) = \gamma(s) \wedge \boldsymbol{n}(s)$. We denote $\tau(s)$ the torsion of $\gamma(s)$. We now give a new curve $\boldsymbol{\sigma}(s) = \gamma(s) + \dfrac{1}{\kappa(s)}\boldsymbol{n}(s)$ and $\boldsymbol{\delta}(s) = -\dfrac{\kappa'(s)}{\tau(s)\kappa^2(s)}\boldsymbol{b}(s)$. Then the focal developable is the surface $F_{(\sigma,\delta)}$ (cf., [13]). The set of singularities is the locus of centres of osculating spheres. We remember that the osculating sphere of the curve is the sphere which has at least fourth points contact with the curve. Porteous[16] has shown that the siguralities of the focal developable of the generic space curve is the cuspidal edge or the swallowtail. The swallowtail of the focal developable corresponds to the point $\gamma(s_0)$ at where

$$\frac{\tau(s)}{\kappa(s)} = \left(\frac{\kappa'(s)}{\kappa^2(s)\tau(s)}\right)', \quad \left(\frac{\tau(s)}{\kappa(s)}\right)' \neq \left(\frac{\kappa'(s)}{\kappa^2(s)\tau(s)}\right)''.$$

Under the assumption that $\kappa(s) \neq 0$ and $\tau(s) \neq 0$, the curve γ is a spherical curve if and only if $\tau(s)/\kappa(s) \equiv (\kappa'(s)/\kappa^2(s)\tau(s))'$. Moreover the swallowtail point of the focal developable corresponds to the point on the curve γ at where the curve has exactly five points contact with the osculating sphere.

Example 2.7 (Rectifying developables of space curves). We also consider a unit speed regular curve $\gamma : I \longrightarrow \mathbb{R}^3$ with non vanishing curvature $\kappa(s)$. There is another important developable surface along γ with respect to the Frenet frame. The envelop of the family of rectifying planes along γ is called *the rectifying developable* of the curve γ. Here, *the rectifying plane* at $\gamma(s)$

is defined to be a plane generated by the tangent vector $\gamma'(s)$ and the binormal vector $\boldsymbol{b}(s)$. In [11] we studied the singularities of rectifying developables of space curves and the geometric meaning. In the classical treatises of differential geometry, *the Darboux vector* of γ is defined by $\boldsymbol{D}(s) = \tau(s)\gamma'(s) + \kappa(s)\boldsymbol{b}(s)$. However, we define a vector $\tilde{\boldsymbol{D}}(s) = (\tau/\kappa)(s)\gamma'(s) + \boldsymbol{b}(s)$ which is called *a modified Darboux vector* of γ. We can show that the rectifying developable of a unitspeed space curve γ is $F_{(\gamma,\tilde{D})}(s,u) = \gamma(s) + u\tilde{\boldsymbol{D}}(s)$. We also define another developable surface $F_{(b,\gamma')}(s,u) = \boldsymbol{b}(s) + u\gamma'(s)$. We call it *a rectifying Gaussian surface* of $\gamma(s)$. In [11] we have staudied the singularities of the rectifying developable and the rectifying Gaussian surface of a space curve $\gamma(s)$ with the condition that $\kappa(s) \neq 0$ and $\tau(s) \neq 0$. It has been shown that the singularities of the rectifying developable and the rectifying Gaussian surface of a generic curve with the condition that $\kappa(s) \neq 0$ and $\tau(s) \neq 0$ are the cuspidal edge or the swallowtail.

The swallowtail point of the rectifying developable corresponds to the point $\gamma(s_0)$ at where the conditions

$$\left(\frac{\tau}{\kappa}\right)'(s_0) \neq 0, \ \left(\frac{\tau}{\kappa}\right)''(s_0) = 0, \ \left(\frac{\tau}{\kappa}\right)^{(3)}(s_0) \neq 0$$

are satisfied. Moreover, the swallowtail point of the rectifying Gaussian surface corresponds to the point $\gamma(s_0)$ at where the conditions

$$\left(\frac{\tau}{\kappa}\right)'(s_0) = 0, \ \left(\frac{\tau}{\kappa}\right)''(s_0) \neq 0$$

are satisfied.

On the other hand, the curve $\gamma(s)$ satisfying the condition that $(\tau/\kappa)(s)$ is constant is *a cylindrical helix*. So the singularities of these developable surface describe how $\gamma(s)$ is different from cylindrical helices. In our paper[11] we did not consider the point $\gamma(s_0)$ at where $\tau(s_0) = 0$. In 1997, Toshi Fukui observed cuspidal crosscaps on rectifying Gaussian surfaces by using the graphical tool of `Mathematica`. In fact, Fig.3 is the picture of the rectifying Gasussian surface of $\gamma(t) = (t, t^2, t^4)$. We can observe the cuspidal crosscap.

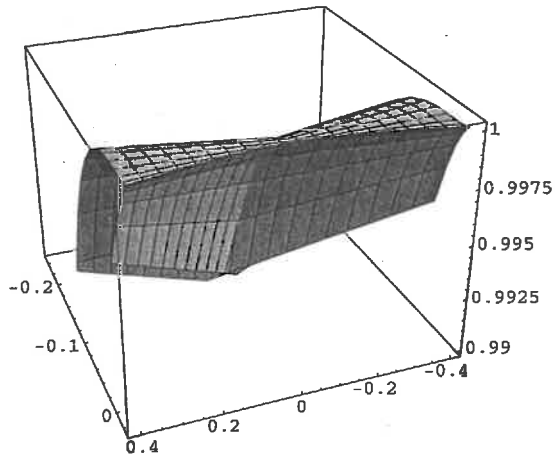

Fig. 3

By the result in this paper, we can assert that the rectifying developable is nonsingular at such a point, but the rectifying Gaussian surface is locally diffeomorphic to the cuspidal crosscap for generic γ. (cf., Theorem 2.8). This means that Fukui's obsevation is true.

We also have other examples which are given by equi-affine differential geometry on space curves [10]. Since we have already used large space for examples, we do not present it here. We now state a classification theorem of singularities of generic developable surfaces.

Theorem 2.8 *Let $F_{(\gamma,\delta)} : I \times J \longrightarrow \mathbb{R}^3$ be a noncylindrical developable surface. We fix smooth functions $\mu, \lambda : I \longrightarrow \mathbb{R}$ with $\gamma'(t) = \mu(t)\boldsymbol{\delta}(t) + \lambda(t)\boldsymbol{\delta}'(t)$. Let $(t_0, u_0) \in I \times J$ be a singular point of $F_{(\gamma,\delta)}$ and put $x_0 = \gamma(t_0) + u_0\boldsymbol{\delta}(t_0) = F_{(\gamma,\delta)}(t_0, u_0)$.*
(1) *Suppose that* $\det(\boldsymbol{\delta}(t_0)\ \boldsymbol{\delta}'(t_0)\ \boldsymbol{\delta}''(t_0)) \neq \mathbf{0}$. *Then*

(a) *The germ of $F_{(\gamma,\delta)}(I \times J)$ at x_0 is locally diffeomorphic to $C \times \mathbb{R}$ if $u_0 = \lambda(t_0)$ and $\mu(t_0) \neq \lambda'(t_0)$.*

(b) *The germ of $F_{(\gamma,\delta)}(I \times J)$ at x_0 is locally diffeomorphic to SW if $u_0 = \lambda(t_0)$, $\mu(t_0) = \lambda'(t_0)$ and $\mu'(t_0) \neq \lambda''(t_0)$.*
(2) *Suppose that* $\det(\boldsymbol{\delta}(t_0)\ \boldsymbol{\delta}'(t_0)\ \boldsymbol{\delta}''(t_0)) = \mathbf{0}$. *Then The germ of $F_{(\gamma,\delta)}(I \times J)$ at x_0 is locally diffeomorphic to CCR if $u_0 = \lambda(t_0)$, $\mu(t_0) \neq \lambda'(t_0)$ and* $\det(\boldsymbol{\delta}(t_0)\ \boldsymbol{\delta}'(t_0)\ \boldsymbol{\delta}^{(3)}(t_0)) \neq \mathbf{0}$.

The proof of Theorem 2.8 will be given in §5 and §6. The classifications in all examples we mentioned in this section are corollaries of Theorem 2.8.

By the ordinary arguments on the jet transversality theorem, we have the following theorem. Since the arguments on the jet transversality theorem are traditional way, we omit the detail.

Theorem 2.9 *There exists an open and dense subset $\mathcal{O} \subset Dev(I, \mathbb{R}^3)$ such that the following conditions hold for any $(\mu, \lambda, \boldsymbol{\delta}) \in \mathcal{O}$:*

(i) *There are no point $(t_0, u_0) \in I \times J$ with $u_0 = \lambda(t_0)$, $\mu(t_0) = \lambda'(t_0)$ and $\mu'(t_0) = \lambda''(t_0)$.*

(ii) *There are finitely many points $(t_0, u_0) \in I \times J$ with $u_0 = \lambda(t_0)$, $\mu(t_0) = \lambda'(t_0)$ and $\mu'(t_0) \neq \lambda''(t_0)$.*

(iii) *There are no point $(t_0, u_0) \in I \times J$ with* $\det(\boldsymbol{\delta}(t_0)\ \boldsymbol{\delta}'(t_0)\ \boldsymbol{\delta}''(t_0)) = 0$, *$u_0 = \lambda(t_0)$ and $\mu(t_0) = \lambda'(t_0)$.*

(iv) *There are no point $(t_0, u_0) \in I \times J$ with* $\det(\boldsymbol{\delta}(t_0)\ \boldsymbol{\delta}'(t_0)\ \boldsymbol{\delta}''(t_0)) = 0$, *and $u_0 = \lambda(t_0)$.*

(v) *There are finitely many points $(t_0, u_0) \in I \times J$ with* $\det(\boldsymbol{\delta}(t_0)\ \boldsymbol{\delta}'(t_0)\ \boldsymbol{\delta}''(t_0)) = 0$, *$u_0 = \lambda(t_0)$, $\mu(t_0) \neq \lambda'(t_0)$ and* $\det(\boldsymbol{\delta}(t_0)\ \boldsymbol{\delta}'(t_0)\ \boldsymbol{\delta}^{(3)}(t_0)) = 0$.

By Theorems 2.8 and 2.9, the cuspidal edge, the cuspidal crosscap and the swallowtail are the exhausitve list of singularities for generic noncylindrical developable surfaces. Since $\mathcal{O}$ in Theorem 2.9 is an open set in $Dev(I, \mathbb{R}^3)$ these singularities are stable under the perturbations of $(\mu, \lambda, \boldsymbol{\delta})$.

3 Ruled fronts

Since a developable surface is co-orientable, we can construct a unique lift to the projective cotangent bundle $\pi : PT^*\mathbb{R}^3 \longrightarrow \mathbb{R}^3$. Firstly, we review geometric properties of this space. Consider the tangent bundle $\tau : TPT^*\mathbb{R}^3 \to PT^*(\mathbb{R}^3)$ and the differential map $d\pi : TPT^*\mathbb{R}^3 \to T\mathbb{R}^3$ of π. For any $X \in TPT^*\mathbb{R}^3$, there exists an element $\alpha \in T_x^*\mathbb{R}^3$ such that $\tau(X) = [\alpha]$. For an element $V \in T_x\mathbb{R}^3$, the property $\alpha(V) = \mathbf{0}$ does not depend on the choice of representative of the class $[\alpha]$. Thus we can define the canonical contact structure on $PT^*\mathbb{R}^3$ by

$$K = \{X \in TPT^*\mathbb{R}^3 | \tau(X)(d\pi(X)) = 0\}.$$

Because of the trivialization $PT^*\mathbb{R}^3 \cong \mathbb{R}^3 \times P(\mathbb{R}^3)^*$, we call

$$((x_1, x_2, x_3), [\xi_1 : \xi_2 : \xi_3])$$

a homogeneous coordinate, where $[\xi_1 : \xi_2 : \xi_3]$ is the homogeneous coordinate of the dual projective space $P(\mathbb{R}^3)^*$.

It is easy to show that $X \in K_{(x,[\xi])}$ if and only if $\sum_{i=1}^3 \mu_i \xi_i = 0$, where $d\tilde{\pi}(X) = \sum_{i=1}^3 \mu_i \frac{\partial}{\partial x_i}$. An immersion $i : L \to PT^*\mathbb{R}^3$ is said to be *a Legendrian immersion* if $\dim L = 3$ and $di_q(T_qL) \subset K_{i(q)}$ for any $q \in L$. For a subset $i : L \subset PT^*\mathbb{R}^3$, it is called *a Legendrian inclusion* if i is a Legendrian immersion on the regular part of L. We also call the set $W(i) = \text{image}\, \pi \circ i$ *a wave front* of i and i (or, the image of i) is called *a Legendrian lift* of $W(i)$. If i is a Legendrian immersion, we say that the image of i is *a regular Legendrian inclusion* and the wave front $W(i)$ has *a regular Legendrian lift.* Otherwise the image of i is called *a singular Legendrian inclusion* and $W(i)$ has *a singular Legendrian lift* . We now define the notion of ruled fronts. We say that the surface in $\mathbb{R}^3$ is *a ruled front* if it is a ruled surface and has a Legendrian lift.

For any developable surface $F_{(\gamma,\delta)} : I \times J \longrightarrow \mathbb{R}^3$, we define a smooth mapping $L_{(\gamma,\delta)} : I \times J \longrightarrow PT^*\mathbb{R}^3$ by $L_{(\gamma,\delta)}(t,u) = (F_{(\gamma,\delta)}(t,u), [\boldsymbol{\delta}(t) \wedge \boldsymbol{\delta}'(t)])$, where we denote that $[\boldsymbol{v}] = [v_1 : v_2 : v_3]$ for any vector $\boldsymbol{v} = (v_1, v_2, v_3)$.

Let $(t,u) \in I \times J$ be a point and $V = \xi \dfrac{\partial}{\partial t} + \eta \dfrac{\partial}{\partial u} \in T_{(t,u)}(I \times J)$ be a tangent vector, then we have $d\pi(dL_{(\gamma,\delta)}(V)) = \xi(\boldsymbol{\gamma}'(t) + u\boldsymbol{\delta}'(t)) + \eta\boldsymbol{\delta}(t)$. Since there exist smooth functions $\mu, \lambda : I \longrightarrow \mathbb{R}$ such that $\boldsymbol{\gamma}'(t) = \mu(t)\boldsymbol{\delta}(t) + \lambda(t)\boldsymbol{\delta}'(t)$, we can easily show that

$$\langle \xi(\boldsymbol{\gamma}'(t) + u\boldsymbol{\delta}'(t)) + \eta\boldsymbol{\delta}(t), \boldsymbol{\delta}(t) \wedge \boldsymbol{\delta}'(t) \rangle = 0.$$

This condition means that $dL_{(\gamma,\delta)}(V) \in K_{L_{(\gamma,\delta)}(t,u)}$. Thus we have shown the following proposition.

Proposition 3.1 *Any noncylindrical developable surface is a ruled front.*

We consider the converse of the above proposition. We can say that any non singular surface is co-orientable, so that it has the unique Legendrian lift. If we consider Hyperboloid of one sheet, it is a non singular ruled surface and it is not a developable surface. This example shows that the converse of the above proposition does not hold in general. We can, however, show the converse of the above proposition for singular ruled fronts.

Proposition 3.2 *If a noncylindrical ruled front has singular points, then it is a developable surface around the singularities.*

Proof. Without loss of generality, we assume that $F_{(\gamma,\delta)}$ is a ruled front such that $\boldsymbol{\gamma}$ is the striction curve and $\|\boldsymbol{\delta}(t)\| \equiv 1$. By Lemma 2.2, singularities are located on the striction curve $\boldsymbol{\gamma}$.

Let $x_0 = F_{(\gamma,\delta)}(t_0, 0)$ be a singular point. If $\boldsymbol{\gamma}'(t_0) = \mathbf{0}$, then the normal direction

$$\frac{\partial F_{(\gamma,\delta)}}{\partial t}(t_0, u) \wedge \frac{\partial F_{(\gamma,\delta)}}{\partial u}(t_0, u) = u(\boldsymbol{\delta}'(t_0) \wedge \boldsymbol{\delta}(t_0))$$

is constant along the ruling through x_0.

It also follows from Lemma 2.2 that the ruling through x_0 is tangent to $\boldsymbol{\gamma}$ at $\boldsymbol{\gamma}(t_0)$ if $\boldsymbol{\gamma}'(t_0) \neq \mathbf{0}$. In this case the direction of the normal vector of $F_{(\gamma,\delta)}$ at x_0 is also given by $\boldsymbol{\delta}'(t_0) \wedge \boldsymbol{\delta}(t_0)$.

On the other hand, if there exists a sequence $\{t_n\}_{n=1}^{\infty}$ convergent to t_0 such that $F_{(\gamma,\delta)}$ is non singular at each $(t_n, 0)$, then we have the normal vector $\gamma'(t_n) \wedge \delta(t_n)$ of the surface $F_{(\gamma,\delta)}$ at $(t_n, 0)$, so that we have

$$\langle \delta'(t_n) \wedge \delta(t_n), \gamma'(t) \wedge \delta(t_n)\rangle = \langle \delta'(t_n), \gamma'(t_n)\rangle\langle \delta(t_n), \delta(t_n)\rangle - \langle \delta'(t_n), \delta(t_n)\rangle\langle \delta(t_n), \gamma'(t_n)\rangle = 0.$$

This means that the direction of $\gamma'(t_n) \wedge \delta(t_n)$ is always orthogonal to the direction of $\delta'(t_n) \wedge \delta(t_n)$. If we consider the limit position of the direction $\gamma'(t_n) \wedge \delta(t_n)$ as $n \longrightarrow \infty$, then it is also orthogonal to $\delta'(t_0) \wedge \delta(t_0)$. This means that we cannot determine the normal direction of $F_{(\gamma,\delta)}$ at $(t_0, 0)$. This contradicts to the assumption that $F_{(\gamma,\delta)}$ is a ruled front.

Hence, the singular set $S = \{t \in I \mid F_{(\gamma,\delta)}$ is singular at $(t, 0)\ \}$ is an open subset in I. Since the singular set S is a closed subset in a connected set I, the surface $F_{(\gamma,\delta)}$ is singular along γ. By the previous arguments, the surface $F_{(\gamma,\delta)}$ is a tangent developable along γ on the place $\gamma'(t) \neq \mathbf{0}$. In this case the normal direction is constant along the ruling through $x = F_{(\gamma,\delta)}(t, 0)$. As we already mentioned that the normal direction is also constant along the ruling through $x = F_{(\gamma,\delta)}(t, 0)$ if $\gamma'(t) = \mathbf{0}$. This is the condition that the ruled surface $F_{(\gamma,\delta)}$ is a developable surface. □

We have the following condition that the developable surface has the regular Legendrian lift.

Proposition 3.3 *Under the same notations as the previous paragraph, the Legendrian lift $L_{(\gamma,\delta)}$ is an immersion at (t_0, u_0) if and only if* $\det(\delta(t_0)\ \delta'(t_0)\ \delta''(t_0)) \neq 0$.

Proof. We denote that $D_{ij}(t) = \delta_i(t)\delta_j'(t) - \delta_j(t)\delta_i'(t)$ for $i, j = 1, 2, 3$, then $\delta(t) \wedge \delta'(t) = (D_{23}, -D_{13}, D_{12})$. Without the loss of generality, we may assume that $D_{23}(t_0) \neq 0$. In this case the local representation of $L_{(\gamma,\delta)}$ in the affine coordinate of $PT^*\mathbb{R}^3$ is given by

$$L_{(\gamma,\delta)}(t, u) = \left(\gamma(t) + u\delta(t), -\frac{D_{13}(t)}{D_{23}(t)}, \frac{D_{12}(t)}{D_{23}(t)}\right).$$

Therefore we have

$$\begin{aligned}
\frac{\partial L_{(\gamma,\delta)}}{\partial t}(t, u) &= \left(\gamma'(t) + u\delta'(t), \frac{\begin{vmatrix} D_{23}(t) & -D_{13}(t) \\ D_{23}'(t) & -D_{13}'(t) \end{vmatrix}}{(D_{23}(t))^2}, \frac{\begin{vmatrix} D_{23}(t) & D_{12}(t) \\ D_{23}'(t) & D_{12}'(t) \end{vmatrix}}{(D_{23}(t))^2}\right) \\
\frac{\partial L_{(\gamma,\delta)}}{\partial u}(t, u) &= (\delta(t), 0, 0).
\end{aligned}$$

It follows that $\operatorname{rank}\begin{pmatrix} \frac{\partial L_{(\gamma,\delta)}}{\partial t}(t_0, u_0) \\ \frac{\partial L_{(\gamma,\delta)}}{\partial u}(t_0, u_0) \end{pmatrix} = 2$ if and only if

$$\left(\begin{vmatrix} -D_{23}(t_0) & D_{13}(t_0) \\ -D_{23}'(t_0) & D_{13}'(t_0) \end{vmatrix}, \begin{vmatrix} D_{12}(t_0) & D_{23}(t_0) \\ D_{12}'(t_0) & D_{23}'(t_0) \end{vmatrix}\right) \neq (0, 0).$$

Concerning on the other cases, we can state that $L_{\gamma,\delta)}$ is an immersion at (t_0, u_0) if and only if

$$\left(\begin{vmatrix} -D_{13}(t_0) & D_{12}(t_0) \\ -D_{13}'(t_0) & D_{12}'(t_0) \end{vmatrix}, \begin{vmatrix} D_{12}(t_0) & D_{23}(t_0) \\ D_{12}'(t_0) & D_{23}'(t_0) \end{vmatrix}, \begin{vmatrix} D_{23}(t_0) & D_{13}(t_0) \\ D_{23}'(t_0) & D_{13}'(t_0) \end{vmatrix}\right) \neq (0, 0, 0).$$

Since

$$\boldsymbol{\delta}(t_0) \wedge \boldsymbol{\delta}'(t_0) = (D_{23}(t_0), -D_{13}(t_0), D_{12}(t_0)) \text{ and } \boldsymbol{\delta}(t_0) \wedge \boldsymbol{\delta}''(t_0) = (D'_{23}(t_0), -D'_{13}(t_0), D'_{12}(t_0)),$$

this condition means that $(\boldsymbol{\delta}(t_0) \wedge \boldsymbol{\delta}'(t_0)) \wedge (\boldsymbol{\delta}(t_0) \wedge \boldsymbol{\delta}''(t_0)) \neq \mathbf{0}$.

On the other hand, we can easily show that $(\boldsymbol{a} \wedge \boldsymbol{b}) \wedge (\boldsymbol{a} \wedge \boldsymbol{c}) = \det(\boldsymbol{a}\ \boldsymbol{b}\ \boldsymbol{c})\boldsymbol{a}$ for any vectors $\boldsymbol{a}, \boldsymbol{b}, \boldsymbol{c} \in \mathbb{R}^3$. So the above condition is equivalent to the condition that $\det(\boldsymbol{\delta}(t_0)\ \boldsymbol{\delta}'(t_0)\ \boldsymbol{\delta}''(t_0)) \neq 0$. □

4 Generating families

For the study of singularities of wave fronts, we refer the Arnol'd-Zakalyukin theory [2, 20] as follows: Let $F : (\mathbb{R}^k \times \mathbb{R}^3, \mathbf{0}) \longrightarrow (\mathbb{R}, \mathbf{0})$ be a function germ. We say that F is *a Morse family* if the mapping

$$\left(F, \frac{\partial F}{\partial q_1}, \ldots, \frac{\partial F}{\partial q_k}\right) : (\mathbb{R}^k \times \mathbb{R}^3, \mathbf{0}) \longrightarrow (\mathbb{R} \times \mathbb{R}^k, \mathbf{0})$$

is non-singular, where $(q, x) = (q_1, \ldots, q_k, x_1, x_2, x_3) \in (\mathbb{R}^k \times \mathbb{R}^3, \mathbf{0})$. In this case we have a smooth surface

$$\Sigma_*(F) = \left\{ (q, x) \in (\mathbb{R}^k \times \mathbb{R}^3, \mathbf{0}) \mid F(q, x) = \frac{\partial F}{\partial q_1}(q, x) = \cdots = \frac{\partial F}{\partial q_k}(q, x) = 0 \right\}$$

and the map germ $\Phi_F : \Sigma_*(F) \longrightarrow PT^*\mathbb{R}^3$ defined by

$$\Phi_F(q, x) = \left(x, [\frac{\partial F}{\partial x_1}(q, x) : \frac{\partial F}{\partial x_2}(q, x) : \frac{\partial F}{\partial x_3}(q, x)]\right)$$

is a Legendrian immersion. Then we have the following fundamental theorem of Arnol'd-Zakalyukin [2, 20].

Proposition 4.1 *All Legendrian submanifold germs in $PT^*\mathbb{R}^3$ are constructed by the above method.*

If F is not a Morse family, $\Sigma_*(F)$ is not a smooth surface and the image $\Phi_F(\Sigma_*(F))$ is a singular Legendrian inclusion. We call F a generating family of Φ_F or $W(\Phi_F)$. Therefore the wave front is

$$W(\Phi_F) = \left\{ x \in \mathbb{R}^3 \mid \text{there exists } q \in \mathbb{R}^k \text{ such that } F(q, x) = \frac{\partial F}{\partial q_1}(q, x) = \cdots = \frac{\partial F}{\partial q_k}(q, x) = 0 \right\}.$$

If $F_q^{-1}(0)$ is a non singular surface for any $q \in \mathbb{R}^k$, then it is the envelope of the k-parameter family of surfaces $\left\{F_q^{-1}(0)\right\}_{q \in \mathbb{R}^k}$. We usually denote that $\mathcal{D}_F = W(\Phi_F)$ and call it *the discriminant set* of F.

We now introduce an equivalence relation among Legendrian inclusion germs. Let $i : (L, p) \subset (PT^*\mathbb{R}^3, p)$ and $i' : (L', p') \subset (PT^*\mathbb{R}^3, p')$ be Legendrian inclusion germs. Then we say that i and i' are *Legendrian equivalent* if there exists a contact diffeomorphism-germ $H : (PT^*\mathbb{R}^3, p) \longrightarrow (PT^*\mathbb{R}^3, p')$ such that H preserves fibres of π and that $H(L) = L'$. A Legendrian immersion-germ into $PT^*\mathbb{R}^3$ at a point is said to be Legendrian stable if for every map

with the given germ there is a neighbourhood in the space of Legendrian immersions (in the Whitney C^∞ topology) and a neighbourhood of the original point such that each Legendrian immersion belonging to the first neighbourhood has in the second neighbourhood a point at which its germ is Legendrian equivalent to the original germ.

We can interpret the above equivalence by using the notion of generating families. We denote $\mathcal{E}_n$ the local ring of function germs $(\mathbb{R}^n, \mathbf{0}) \longrightarrow \mathbb{R}$ with the unique maximal ideal $\mathcal{M}_n = \{h \in \mathcal{E}_n \mid h(0) = 0\}$. Let $F, G : (\mathbb{R}^k \times \mathbb{R}^3, \mathbf{0}) \longrightarrow (\mathbb{R}, \mathbf{0})$ be function-germs. We say that F and G are *P-$\mathcal{K}$-equivalent* if there exists a diffeomorphism-germ $\Psi : (\mathbb{R}^k \times \mathbb{R}^3, \mathbf{0}) \longrightarrow (\mathbb{R}^k \times \mathbb{R}^3, \mathbf{0})$ of the form $\Psi(x, u) = (\psi_1(q, x), \psi_2(x))$ for $(q, x) \in (\mathbb{R}^k \times \mathbb{R}^3, \mathbf{0})$ such that $\Psi^*(\langle F \rangle_{\mathcal{E}_{k+3}}) = \langle G \rangle_{\mathcal{E}_{n+k}}$. Here $\Psi^* : \mathcal{E}_{k+3} \longrightarrow \mathcal{E}_{k+3}$ is defined by $\Psi^*(h) = h \circ \Psi$.

Let $F : (\mathbb{R}^k \times \mathbb{R}^3, \mathbf{0}) \longrightarrow (\mathbb{R}, \mathbf{0})$ a function-germ. We say that F is a *$\mathcal{K}$-versal unfolding of* $f = F|\mathbb{R}^k \times \{\mathbf{0}\}$ if

$$\mathcal{E}_k = T_e(\mathcal{K})(f) + \left\langle \frac{\partial F}{\partial x_1}|\mathbb{R}^k \times \{\mathbf{0}\}, \frac{\partial F}{\partial x_2}|\mathbb{R}^k \times \{\mathbf{0}\}, \frac{\partial F}{\partial x_3}|\mathbb{R}^k \times \{\mathbf{0}\}, \right\rangle_{\mathbb{R}},$$

where

$$T_e(\mathcal{K})(f) = \left\langle \frac{\partial f}{\partial q_1}, \ldots, \frac{\partial f}{\partial q_k}, f \right\rangle_{\mathcal{E}_k}.$$

(See [14].)

The main result in Arnol'd-Zakalykin's theory[2, 20] is as follows:

Theorem 4.2 *Let $F, G : (\mathbb{R}^k \times \mathbb{R}^3, \mathbf{0}) \longrightarrow (\mathbb{R}, 0)$ be Morse families. Then*
(1) *Φ_F and Φ_G are Legendrian equivalent if and only if*

$$\mathrm{rank} H(F \mid \mathbb{R}^k \times \{\mathbf{0}\}) = \mathrm{rank} H(G \mid \mathbb{R}^k \times \{\mathbf{0}\})$$

and F, G are P-$\mathcal{K}$-equivalent.

Here $H(F \mid \mathbb{R}^k \times \{\mathbf{0}\})$ is the Hessian matrix of $F \mid \mathbb{R}^k \times \{\mathbf{0}\}$ at $\mathbf{0}$.
(2) *Φ_F is Legendrian stable if and only if F is a $\mathcal{K}$-versal unfolding of $F \mid \mathbb{R}^k \times \{\mathbf{0}\}$.*

Let $F_{(\gamma,\delta)}$ be a noncylindrical developable surface. By Proposition 3.3, the Legendrian lift $L_{(\gamma,\delta)}$ is a Legendrian immersion at the point (t_0, u_0) where $\det(\boldsymbol{\delta}(t_0)\ \boldsymbol{\delta}'(t_0)\ \boldsymbol{\delta}''(t_0)) \neq 0$. Thus, the generating family of $L_{(\gamma,\delta)}$ exists at $L_{(\gamma,\delta)}(t_0, u_0)$ by the general theory.

We now explicitly write down the (global) generating family of $L_{(\gamma,\delta)}$. Since $F_{(\gamma,\delta)}$ is noncylindrical, $\boldsymbol{\delta}(t) \wedge \boldsymbol{\delta}'(t)$ never vanishes. We define a smooth family of functions

$$F : I \times \mathbb{R}^3 \longrightarrow \mathbb{R}$$

by

$$F(t, x) = \langle \boldsymbol{\gamma}(t) - x, \boldsymbol{\delta}(t) \wedge \boldsymbol{\delta}'(t) \rangle.$$

We denote that $f_x(t) = F(t, x)$. Then we have the following proposition.

Proposition 4.3 *Let $F_{(\gamma,\delta)} : I \times J \longrightarrow \mathbb{R}^3$ be a noncylindrical developable surface. Then*
(1) *$f_x(t) = 0$ if and only if there exist $\xi, \eta \in \mathbb{R}$ such that $x = \boldsymbol{\gamma}(t) + \xi\boldsymbol{\delta}(t) + \eta\boldsymbol{\delta}'(t)$.*
(2) *$f_x(t) = f_x'(t) = 0$ if and only if there exist $\xi, \eta \in \mathbb{R}$ such that $x = \boldsymbol{\gamma}(t) + \xi\boldsymbol{\delta}(t) + \eta\boldsymbol{\delta}'(t)$ and $\eta\det(\boldsymbol{\delta}(t)\ \boldsymbol{\delta}'(t)\ \boldsymbol{\delta}''(t)) = 0$.*

Proof. Since there exists functions $\mu, \lambda : I \longrightarrow \mathbb{R}$ with $\gamma'(t) = \mu(t)\boldsymbol{\delta}(t) + \lambda(t)\boldsymbol{\delta}'(t)$, we have

$$f'_x(t) = \langle \gamma'(t), \boldsymbol{\delta}(t) \wedge \boldsymbol{\delta}'(t) \rangle + \langle \gamma(t) - x, \boldsymbol{\delta}(t) \wedge \boldsymbol{\delta}''(t) \rangle = \langle \gamma(t) - x, \boldsymbol{\delta}(t) \wedge \boldsymbol{\delta}''(t) \rangle.$$

The assertion (1) is trivial. For the proof of the assertion (2), we may assume that there exist $\xi, \eta \in \mathbb{R}$ such that $x = \gamma(t) + \xi\boldsymbol{\delta}(t) + \eta\boldsymbol{\delta}'(t)$. Since $f'_x(t) = 0$,

$$0 = \langle -\xi\boldsymbol{\delta}(t) - \eta\boldsymbol{\delta}'(t), \boldsymbol{\delta}(t) \wedge \boldsymbol{\delta}''(t) \rangle = -\eta\langle \boldsymbol{\delta}'(t), \boldsymbol{\delta}(t) \wedge \boldsymbol{\delta}''(t) \rangle = \eta \det(\boldsymbol{\delta}(t)\ \boldsymbol{\delta}'(t)\ \boldsymbol{\delta}''(t)).$$

□

By Proposition 4.3, we have $\Sigma_*(F) = \Sigma_{Dev}(F) \cup \Sigma_\sigma(F)$, where

$$\Sigma_{Dev}(F) = \left\{(t, x) \in \mathbb{R} \times \mathbb{R}^3 \mid \text{there exists } \xi \in \mathbb{R} \text{ such that } x = \gamma(t) + \xi\boldsymbol{\delta}(t)\right\}$$

and

$$\begin{aligned}\Sigma_\sigma(F) = \{(t, x) \in \mathbb{R} \times \mathbb{R}^3 \mid &\text{ there exist } \xi, \eta \in \mathbb{R} \text{ such that} \\ x = \gamma(t) + \xi\boldsymbol{\delta}(t) + \eta\boldsymbol{\delta}'(t) &\text{ and } \det(\boldsymbol{\delta}(t)\ \boldsymbol{\delta}'(t)\ \boldsymbol{\delta}''(t)) = 0\ \}.\end{aligned}$$

Therefore the discriminant set of F is

$$\mathcal{D}_F = W(\Phi_F) = F_{(\gamma,\delta)}(I \times J) \cup \pi(\Sigma_\sigma(F)).$$

It follows that $\Phi_F(\Sigma_{Dev}(F))$ is the unique Legendrian lift of the developable surface $F_{(\gamma,\delta)}$. By this reason, we call the function $F(t, x) = \langle \gamma(t) - x, \boldsymbol{\delta}(t) \wedge \boldsymbol{\delta}'(t) \rangle$ *the generating family of the developable surface* $F_{(\gamma,\delta)}$. By the general theory of Legendrian singularity[2, 20], the Legendrian inclusion $L_{(\gamma,\delta)}$ is non singular if the generating family is a Morse family. The following theorem give the condition that the generating family is a Morse family.

Theorem 4.4 *Let $F_{(\gamma,\delta)} : I \times J \longrightarrow \mathbb{R}^3$ be a noncylindrical developable surface and (t_0, u_0) be a singular point of $F_{(\gamma,\delta)}$. Then the followings are equivalent:*
(1) *$L_{(\gamma,\delta)} : I \times J \longrightarrow PT^*\mathbb{R}^3$ is non singular at (t_0, u_0).*
(2) $\det(\boldsymbol{\delta}(t_0)\ \boldsymbol{\delta}'(t_0)\ \boldsymbol{\delta}''(t_0)) \neq 0$.
(3) *$F(t, x) = \langle \gamma(t) - x, \boldsymbol{\delta}(t) \wedge \boldsymbol{\delta}'(t) \rangle$ is a Morse family at (t_0, x_0).*
Here, $x_0 = \gamma(t_0) + u_0\boldsymbol{\delta}(t_0)$.

Proof. By Proposition 3.3, the conditions (1) and (2) are equivalent. By the general theory of Legendrian singularity, the condition (3) implies the condition (1).

We now prove that the condition (2) implies the condition (3). For the purpose, we have

$$\frac{\partial F}{\partial x_1}(t, x) = -D_{23}(t), \quad \frac{\partial F}{\partial x_2}(t, x) = D_{13}(t), \quad \frac{\partial F}{\partial x_3}(t, x) = -D_{12}(t).$$

Therefore we have

$$\frac{\partial^2 F}{\partial x_1 \partial t}(t, x) = -D'_{23}(t), \quad \frac{\partial^2 F}{\partial x_2 \partial t}(t, x) = D'_{13}(t), \quad \frac{\partial^2 F}{\partial x_3 \partial t}(t, x) = -D'_{12}(t).$$

Hence, the Jacobian matrix of $\left(F(t, x), \dfrac{\partial F}{\partial t}(t, x)\right)$ is

$$\begin{pmatrix} \frac{\partial F}{\partial t}(t, x) & -D_{23}(t) & D_{13}(t) & -D_{12}(t) \\ \frac{\partial^2 F}{\partial t^2}(t, x) & -D'_{23}(t) & D'_{13}(t) & -D'_{12}(t) \end{pmatrix} = \begin{pmatrix} \frac{\partial F}{\partial t}(t, x) & -\boldsymbol{\delta}(t) \wedge \boldsymbol{\delta}'(t) \\ \frac{\partial^2 F}{\partial t^2}(t, x) & -\boldsymbol{\delta}(t) \wedge \boldsymbol{\delta}''(t) \end{pmatrix}.$$

Since (t_0, u_0) is a singular point of $F_{(\gamma,\delta)}$, we have

$$F(t_0, x_0) = \frac{\partial F}{\partial t}(t_0, x_0) = \frac{\partial^2 F}{\partial t^2}(t_0, x_0) = 0.$$

By the last arguments in the proof of Proposition 3.3, $\boldsymbol{\delta}(t_0) \wedge \boldsymbol{\delta}'(t_0)$ and $\boldsymbol{\delta}(t_0) \wedge \boldsymbol{\delta}''(t_0)$ are linearly independent if and only if $\det(\boldsymbol{\delta}(t_0)\ \boldsymbol{\delta}'(t_0)\ \boldsymbol{\delta}''(t_0)) \neq 0$. This completes the proof. □

5 Unfoldings of functions of one variable

In this section we use some general results on the singularity theory for families of function germs. Detailed descriptions are found in the book [4]. Let $F : (\mathbb{R} \times \mathbb{R}^r, (t_0, x_0)) \to \mathbb{R}$ be a function germ. We call F an *r-parameter unfolding* of f, where $f(t) = F_{x_0}(t, x_0)$. We say that f has *A_k-singularity* at t_0 if $f^{(p)}(t_0) = 0$ for all $1 \leq p \leq k$, and $f^{(k+1)}(t_0) \neq 0$. We also say that f has *$A_{\geq k}$-singularity* at t_0 if $f^{(p)}(t_0) = 0$ for all $1 \leq p \leq k$. Let F be an unfolding of f and $f(t)$ has A_k-singularity ($k \geq 1$) at t_0. We denote the $(k-1)$-jet of the partial derivative $\frac{\partial F}{\partial x_i}$ at t_0 by $j^{(k-1)}(\frac{\partial F}{\partial x_i}(t, x_0))(t_0) = \sum_{j=1}^{k-1} \alpha_{ji} t^j$ for $i = 1, \ldots, r$. Then the following lemma holds (cf., [4, 14]).

Lemma 5.1 *F is a $\mathcal{K}$-versal unfolding if and only if the $k \times r$ matrix of coefficients $(\alpha_{0i}, \alpha_{ji})$ has rank k ($k \leq r$), where $\alpha_{0i} = \frac{\partial F}{\partial x_i}(t_0, x_0)$.*

We are interested in the discriminant set $\mathcal{D}_F$ of F. Then we have the following well-known result (cf., [4]).

Theorem 5.2 *Let $F : (\mathbb{R} \times \mathbb{R}^r, (t_0, x_0)) \to \mathbb{R}$ be an r-parameter unfolding of $f(t)$ which has the A_k singularity at t_0.*
Suppose that F is a $\mathcal{K}$-versal unfolding.

(1) *If $k = 1$, then $\mathcal{D}_F$ is locally diffeomorphic to $\{0\} \times \mathbb{R}^{r-1}$.*
(2) *If $k = 2$, then $\mathcal{D}_F$ is locally diffeomorphic to $C \times \mathbb{R}^{r-2}$.*
(3) *If $k = 3$, then $\mathcal{D}_F$ is locally diffeomorphic to $SW \times \mathbb{R}^{r-3}$.*

Here, $C = \{(x_1, x_2) | {x_1}^2 = {x_2}^3\}$ is the ordinary cusp and $SW = \{(x_1, x_2, x_3) | x_1 = 3u^4 + u^2 v, x_2 = 4u^3 + 2uv, x_3 = v\}$ is the swallowtail.

We consider the case when the generating family $F(t, x) = \langle \gamma(t) - x, \boldsymbol{\delta}(t) \wedge \boldsymbol{\delta}'(t) \rangle$ of $F_{(\gamma,\delta)}$ is a Morse family at (t_0, x_0) (i.e., $\det(\boldsymbol{\delta}(t_0)\ \boldsymbol{\delta}'(t_0)\ \boldsymbol{\delta}''(t_0)) \neq 0$).

Proposition 5.3 *Let $F_{(\gamma,\delta)} : I \times J \longrightarrow \mathbb{R}^3$ be a noncylindrical developable surface. Assume that there exist function $\mu, \lambda : I \longrightarrow \mathbb{R}$ such that $\gamma'(t) = \mu(t)\boldsymbol{\delta}(t) + \lambda(t)\boldsymbol{\delta}'(t)$ and $\det(\boldsymbol{\delta}(t_0)\ \boldsymbol{\delta}'(t_0)\ \boldsymbol{\delta}''(t_0)) \neq 0$.*

(1) *$f_{x_0}(t_0) = f'_{x_0}(t_0) = f''_{x_0}(t_0) = 0$ if and only if $x_0 = \gamma(t_0) - \lambda(t_0)\boldsymbol{\delta}(t_0)$.*

(2) *$f_{x_0}(t_0) = f'_{x_0}(t_0) = f''_{x_0}(t_0) = f^{(3)}_{x_0}(t_0) = 0$ if and only if the condition of the assertion (1) holds and $\mu(t_0) = \lambda'(t_0)$.*

(3) *$f_{x_0}(t_0) = f'_{x_0}(t_0) = f''_{x_0}(t_0) = f^{(3)}_{x_0}(t_0) = f^{(4)}_{x_0}(t_0) = 0$ if and only if the condition of the assertion (2) holds and $\mu'(t_0) = \lambda''(t_0)$.*

Proof. We have already calculated the first derivative of f_x, in the proof of Proposition 4.3, so that we have $f_x'(t) = \langle \gamma(t) - x; \boldsymbol{\delta}(t) \wedge \boldsymbol{\delta}''(t) \rangle$. Therefore we have

$$\begin{aligned} f_x''(t) &= \langle \gamma'(t), \boldsymbol{\delta}(t) \wedge \boldsymbol{\delta}''(t) \rangle + \langle \gamma(t) - x, \boldsymbol{\delta}'(t) \wedge \boldsymbol{\delta}''(t) \rangle + \langle \gamma(t) - x, \boldsymbol{\delta}(t) \wedge \boldsymbol{\delta}^{(3)}(t) \rangle \\ &= \lambda(t) \langle \boldsymbol{\delta}'(t), \boldsymbol{\delta}(t) \wedge \boldsymbol{\delta}''(t) \rangle + \langle \gamma(t) - x, \boldsymbol{\delta}'(t) \wedge \boldsymbol{\delta}''(t) \rangle + \langle \gamma(t) - x, \boldsymbol{\delta}(t) \wedge \boldsymbol{\delta}^{(3)}(t) \rangle. \end{aligned}$$

By Proposition 4.3, we may assume that there exists $\xi \in \mathbb{R}$ with $x_0 = \gamma(t_0) + \xi \boldsymbol{\delta}(t_0)$. Substituting (t_0, x_0) into $f_x''(t)$, we have the assetion (1).

By direct but rather long calculations, we have other assertions. Therefore we omit the detail. □

Moreover , we have the following proposition

Proposition 5.4 *If f_{x_0} has the A_k-singularity $(k = 1, 2, 3)$ at t_0, then F is a $\mathcal{K}$-versal unfolding of f_{x_0}.*

Proof. Case (1) When f_{x_0} has the A_1-singularity at t_0, we define the 1×2-matrix A as follows:

$$\left(\frac{\partial F}{\partial x_1}(t_0, x_0), \frac{\partial F}{\partial x_2}(t_0, x_0), \frac{\partial F}{\partial x_3}(t_0, x_0) \right)$$

As we already calculated in the proof of Theorem 4.4 that

$$\frac{\partial F}{\partial x_1}(t, x) = -D_{23}(t), \ \frac{\partial F}{\partial x_2}(t, x) = D_{13}(t), \ \frac{\partial F}{\partial x_3}(t, x) = -D_{12}(t).$$

On the other hand, we have

$$A = (-D_{23}(t_0), D_{13}(t_0), -D_{12}(t_0)) = -\boldsymbol{\delta}(t_0) \wedge \boldsymbol{\delta}'(t_0) \neq 0.$$

Therefore rank $A = 1$.

Case (2) When f_{x_0} has the A_2-singularity at t_0, we also require the 2×3-matrix

$$B = \begin{pmatrix} \frac{\partial F}{\partial x_1}(t_{,0} x_0) & \frac{\partial F}{\partial x_2}(t_0, x_0) & \frac{\partial F}{\partial x_3}(t_0, x_0) \\ \frac{\partial^2 F}{\partial x_1 \partial t}(t_{,0} x_0) & \frac{\partial^2 F}{\partial x_2 \partial t}(t_0, x_0) & \frac{\partial^2 F}{\partial x_3 \partial t}(t_0, x_0) \end{pmatrix}$$

to be nonsingular. By Proposition 5.3, $f_{x_0}(t)$ has the A_2-singularity at t_0 if and only if $x_0 = \gamma(t_0) - \lambda(t_0)\boldsymbol{\delta}(t_0)$ and $\mu(t_0) \neq \lambda'(t_0)$. It also follows from the proof of Theorem 4.4 that

$$B = \begin{pmatrix} -D_{23}(t_0) & D_{13}(t_0) & -D_{12}(t_0) \\ -D_{23}'(t_0) & D_{13}'(t_0) & -D_{12}'(t_0) \end{pmatrix} = \begin{pmatrix} -\boldsymbol{\delta}(t_0) \wedge \boldsymbol{\delta}'(t_0) \\ -\boldsymbol{\delta}(t_0) \wedge \boldsymbol{\delta}''(t_0) \end{pmatrix}.$$

Since $\det(\boldsymbol{\delta}(t_0)\ \boldsymbol{\delta}'(t_0)\ \boldsymbol{\delta}''(t_0)) \neq 0$, $\boldsymbol{\delta}(t_0) \wedge \boldsymbol{\delta}'(t_0)$ and $\boldsymbol{\delta}(t_0) \wedge \boldsymbol{\delta}''(t_0)$ are linearly independent. This means that the rank of B is two.

Case (3) When f_{x_0} has the A_3-singularity at t_0, we consider the 3×3-matrix

$$C = \begin{pmatrix} \frac{\partial F}{\partial x_1}(t_0, x_0) & \frac{\partial F}{\partial x_2}(t_0, x_0) & \frac{\partial F}{\partial x_3}(t_0, x_0) \\ \frac{\partial^2 F}{\partial x_1 \partial t}(t_{,0} x_0) & \frac{\partial^2 F}{\partial x_2 \partial t}(t_0, x_0) & \frac{\partial^2 F}{\partial x_3 \partial t}(t_0, x_0) \\ \frac{\partial^3 F}{\partial x_1 \partial t^2}(t_{,0} x_0) & \frac{\partial^3 F}{\partial x_2 \partial t^2}(t_0, x_0) & \frac{\partial^3 F}{\partial x_3 \partial t^2}(t_0, x_0) \end{pmatrix}.$$

Since

$$\left(\frac{\partial^2 F}{\partial x_1 \partial t}(t_0, x_0), \frac{\partial^2 F}{\partial x_2 \partial t}(t_0, x_0), \frac{\partial^2 F}{\partial x_3 \partial t}(t_0, x_0)\right) = -\boldsymbol{\delta}(t_0) \wedge \boldsymbol{\delta}''(t_0),$$

we have

$$\left(\frac{\partial^3 F}{\partial x_1 \partial t^2}(t_{,0} x_0), \frac{\partial^3 F}{\partial x_2 \partial t^2}(t_{,0} x_0), \frac{\partial^3 F}{\partial x_3 \partial t^2}(t_{,0} x_0)\right) = -\delta'(t_0) \wedge \boldsymbol{\delta}''(t_0) - \boldsymbol{\delta}(t_0) \wedge \boldsymbol{\delta}^{(3)}(t_0).$$

Therefore we have

$$\begin{aligned}
\det(C) &= \langle -\delta'(t_0) \wedge \boldsymbol{\delta}''(t_0) - \boldsymbol{\delta}(t_0) \wedge \boldsymbol{\delta}^{(3)}(t_0), (-\boldsymbol{\delta}(t_0) \wedge \boldsymbol{\delta}'(t_0)) \wedge (-\boldsymbol{\delta}(t_0) \wedge \boldsymbol{\delta}''(t_0))\rangle \\
&= \langle -\delta'(t_0) \wedge \boldsymbol{\delta}''(t_0) - \boldsymbol{\delta}(t_0) \wedge \boldsymbol{\delta}^{(3)}(t_0), \det(\boldsymbol{\delta}(t_0)\ \boldsymbol{\delta}'(t_0)\ \boldsymbol{\delta}''(t_0))\boldsymbol{\delta}(t_0)\rangle \\
&= -\det(\boldsymbol{\delta}(t_0)\ \boldsymbol{\delta}'(t_0)\ \boldsymbol{\delta}''(t_0))\langle \boldsymbol{\delta}'(t_0) \wedge \boldsymbol{\delta}''(t_0), \boldsymbol{\delta}(t_0)\rangle = -(\det(\boldsymbol{\delta}(t_0)\ \boldsymbol{\delta}'(t_0)\ \boldsymbol{\delta}''(t_0)))^2.
\end{aligned}$$

By the assumption, we have $\det(C) \neq 0$. This completes the proof. □

By Theorem 5.2 and Proposition 5.4, we compltete the proof of the assertion (1) of Theorem 2.8.

6 The cuspidal crosscap

In order to prove the remaining part of Theorem 2.8, we use the classification result on tangent developables. As we already mentioned in Example 2.5 that Cleave [3] has shown that the tangent developable of a regular space curve $\boldsymbol{\gamma}(t)$ has the cuspidal crosscap at a point $\boldsymbol{\gamma}(t_0)$ if and only if $\tau(t_0) = 0$ and $\tau'(t_0) \neq 0$. We now apply this result to our situation. Let $F_{(\gamma,\delta)}$ be a developable surface. We fix two smooth functions $\mu, \lambda : I \longrightarrow \mathbb{R}^3$ with $\boldsymbol{\gamma}'(t) = \mu(t)\delta(t) + \lambda(t)\boldsymbol{\delta}'(t)$. By Corollary 2.4, the singular locus of the developable surface is given by $\boldsymbol{\sigma}(t) = \boldsymbol{\gamma}(t) - \lambda(t)\boldsymbol{\delta}(t)$. Since $\boldsymbol{\sigma}'(t) = (\mu(t) - \lambda'(t))\boldsymbol{\delta}(t)$, $\boldsymbol{\sigma}(t)$ is a regular space curve if and only if $\mu(t) - \lambda'(t) \neq 0$. Under this condition the torsion of $\boldsymbol{\sigma}(t)$ is given by

$$\frac{\det(\boldsymbol{\sigma}'(t)\ \boldsymbol{\sigma}''(t)\ \boldsymbol{\sigma}^{(3)}(t))}{\|\boldsymbol{\sigma}'(t) \wedge \boldsymbol{\sigma}''(t)\|^2}.$$

By the direct calculation that the torsion of $\boldsymbol{\sigma}(t)$ is

$$\tau_\sigma(t) = (\mu(t) - \lambda'(t))\frac{\det(\boldsymbol{\delta}(t)\ \boldsymbol{\delta}'(t)\ \boldsymbol{\delta}''(t))}{\|\boldsymbol{\delta}'(t) \wedge \boldsymbol{\delta}''(t)\|^2}.$$

The first derivative of the torsion of $\boldsymbol{\sigma}(t)$ is

$$\begin{aligned}
\tau'_\sigma(t) = &\frac{(\mu(t) - \lambda'(t))'\det(\boldsymbol{\delta}(t)\ \boldsymbol{\delta}'(t)\ \boldsymbol{\delta}''(t))}{\|\boldsymbol{\delta}'(t) \wedge \boldsymbol{\delta}''(t)\|^2} \\
&- \frac{2(\mu(t) - \lambda'(t))\langle(\boldsymbol{\delta}(t) \wedge \boldsymbol{\delta}''(t)), (\boldsymbol{\delta}(t) \wedge \boldsymbol{\delta}'(t))\rangle\det(\boldsymbol{\delta}(t)\ \boldsymbol{\delta}'(t)\ \boldsymbol{\delta}''(t))}{\|\boldsymbol{\delta}'(t) \wedge \boldsymbol{\delta}''(t)\|^4} \\
&+ (\mu(t) - \lambda'(t))\frac{\det(\boldsymbol{\delta}'(t)\ \boldsymbol{\delta}''(t)\ \boldsymbol{\delta}^{(3)}(t))}{\|\boldsymbol{\delta}'(t) \wedge \boldsymbol{\delta}''(t)\|^2}.
\end{aligned}$$

Therefore the tangent developable $F_{(\gamma,\delta)}$ of $\sigma(t)$ has the cuspicalcrosscap at the point $\sigma(t_0) = \gamma(t_0) - \lambda(t_0)\delta(t_0)$ if and only if

$$\det(\delta(t_0)\ \delta'(t_0)\ \delta''(t_0)) = 0 \textit{ and } \det(\delta(t_0)\ \delta'(t_0)\ \delta^{(3)}(t_0)) \neq 0.$$

This completes the proof of the assertion (2) of Theorem 2.8.

Remarks Since a developable surface is considered to be the tangent developable of the singular locus, we can also apply the method of Ishikawa in [9] for the proof of Theorem 2.8. The calculation is, however, a rather complicated compared with the method we used in this paper. Moreover, our method also gives information on generating families of developable surfaces. These facts clarify the feature of singularities of developable surfaces from the view point of contact geometry.

References

[1] V. I. Arnol'd, *Lagrangian manifolds with singularities, asymptotic rays, and the open swallowtail*, Funct. Anal. Appl., vol 15-4 (1981), 235–246

[2] V. I. Arnol'd, S. M. Gusein-Zade and A. N. Varchenko, *Singularities of Differentiable Maps vol. I*, Birkhäuser (1986)

[3] V. I. Arnol'd, *Singularities of Caustics and Wave fronts*, Kluwer Academic Publishers, (1990)

[4] J. W. Bruce and P. J. Giblin, *Curves and singularities*, Cambridge University press (1984)

[5] J.P.Cleave, *The form of the tangent developable at points of zero taorsion on space curves*, Math.Proc.Camb.Phil. vol 88 (1980), 403–407

[6] A. Gray, *Modern Differential Geometry of Curves and Surfaces*, CRC PRESS (1993)

[7] J. Hoschek and H. Pottman, *Interpolation and approximation with developable B-spline surfaces , in Mathematical Methods for curves and surfaces, ed. by M. Dæhlen, T. Lyche and L.L. Schumacker*, Vanderbilt Univ. Press (1995), 255–264

[8] G. Ishikawa, *Determinancy of envelope of the osculating hyperplanes to a curve*, Bull.London Math.Soc., vol 25 (1993), 787–798

[9] G. Ishikawa, *Developable of a curve and determinacy relative to osculation-type* , Quart. J. Math. Oxford, vol 46 (1995), 437–451

[10] S. Izumiya and T. Sano, *Generic affine differential geometry of space curves*, Proceedings of the Royal Society of Edinburgh , vol 128A (1998), 301–314

[11] S. Izumiya, H. Katsumi and T. Yamasaki, *The Rectifying developable and the Darboux indicatrix of a space curve*, Geometry and Topology of Caustics–Caustics '98, Banach Center Publcations, vol 50 (1999), 137–149

[12] S. Izumiya, D.-H. Pei and T. Sano, *The lightcone Gauss map and the lightcone developable of a spacelike curve in Minkowski 3-sapce*, Glasgow Math. J., vol 42 (2000), 75–89

[13] J. Koenderink, *Solid Shape*, MIT Press, Cambridge, MA, (1990)

[14] J. Martinet, *Singularities of Smooth Functions and Maps*, London Math. Soc. Lecture Note Series, Cambridge Univ. Press, vol 58 (1982)

[15] D. Mond, *Singularities of the tangent developable surface of a space curve*, Quart. J. Math. Oxford, vol 40 (1989), 79–91

[16] I. Porteous *The normal singularities of submanifold*, J. Diff. Geom., vol 5 (1971), 543–564

[17] T. Sasaki, *Projective Differential Geometry and Linear Homogeneous Differential Equations*, Rokko Lectures in Mathematics, Kobe University, vol 5 (1999)

[18] O. P. Scherbak, *Projectively dual space curve and Legendre singularities*, Sel. Math. Sov., vol 5 (1986), 391–421

[19] M. Schneider, *Interpolation with Developable Strip-Surfaces Consisting of Cylinders and Cones, in Mathematical Methods for curves and surfaces I I, ed. by M. Dæhlen, T. Lyche and L.L. Schumacker*, Vanderbilt Univ. Press, (1998), 437–444

[20] V. M. Zakalyukin, *Lagrangian and Legendrian singularities*, Funct. Anal. Appl., vol 10 (1976), 23–31

Recent Newton Institute Preprints

NI00001-SMM **KZ Markov**
Justification of an effective field method in elasto-statics of heterogeneous solids

NI00002-SCE **YY Lobanov and VD Rushai**
Studying the evolution of open quantum systems via conditional Wiener integrals

NI00003-SCE **J-G Wang and G-S Tian**
Spin and charged gaps in strongly correlated electron systems with negative or positive couplings

NI00004-SCE **FV Kusmartsev**
Conducting electron strings in oxides

NI00005-ERN **SG Dani**
On ergodic Z^d actions on Lie groups by automorphisms

NI00006-SMM **V Nesi and G Alessandrini**
Univalence of σ-harmonic mappings and applications

NI00007-SCE **X Dai, T Xiang, T-K Ng et al**
Probing superconducting phase fluctuations from the current noise spectrum of pseudogaped metal-superconductor tunnel junctions

NI00008-ERN **B Hasselblatt**
Hyperbolic dynamical systems

NI00009-SCE **J Lou, S Quin, T-K Ng et al**
Topological effects at short antiferromagnetic Heisenberg chains

NI00010-SCE **V Zlatić and J Freericks**
Theory of valence transitions in Ytterbium-based compounds

NI00011-ERN **A Iozzi and D Witte**
Cartan-decomposition subgroups of SU(2,n)

NI00012-ERN **D Witte and L Lifschitz**
On automorophisms of arithmetic subgroups of unipotent groups in positive characteristic

NI00013-ERN **D Witte**
Homogeneous Lorentz manifold with simple isometry group

NI00014-SGT **R Uribe-Vargos**
Global theorems on vertics and flattenings of closed curves

NI00015-SGT **EA Bartolo, P Cassou-Nogués, I Luengo et al**
Monodromy conjecture for some surface singularities

NI00016-SGT **IG Scherbak**
Boundary singularities and non-crystallographic Coxeter groups

NI00017-SGT **K Houston**
On the classification and topology of complex map-germs of corank one and $\mathcal{A}_e$-codimension one

NI00018-SGT **PJ Topalov and VS Matveev**
Geodesic equivalence via integrability

NI00019-GTF **S Friedlander**
On vortex tube stretching and instabilities in an inviscid fluid

NI00020-SGT **VD Sedykh**
Some invariants of admissible homotopies of space curves

NI00021-SGT **IA Bogaevsky**
Singularities of linear waves in plane and space

Information about Newton Institute Preprints is also available at
`http://www.newton.cam.ac.uk/preprints.html`